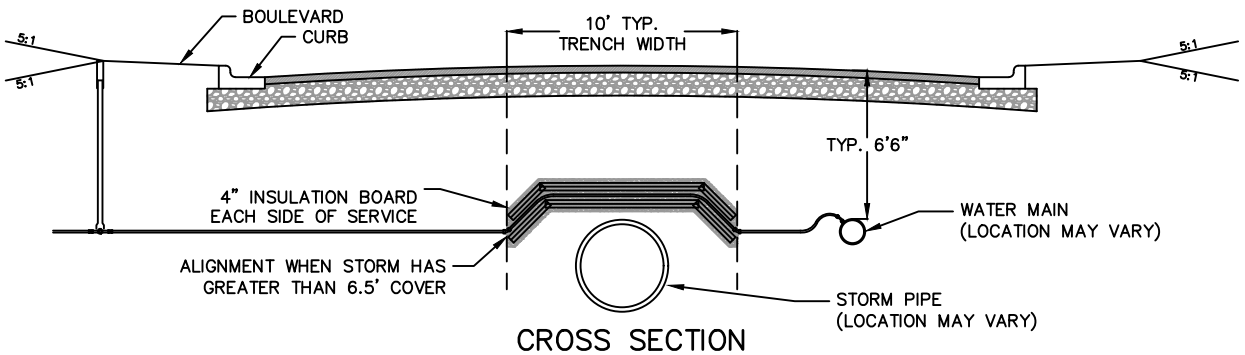

CROSS SECTION

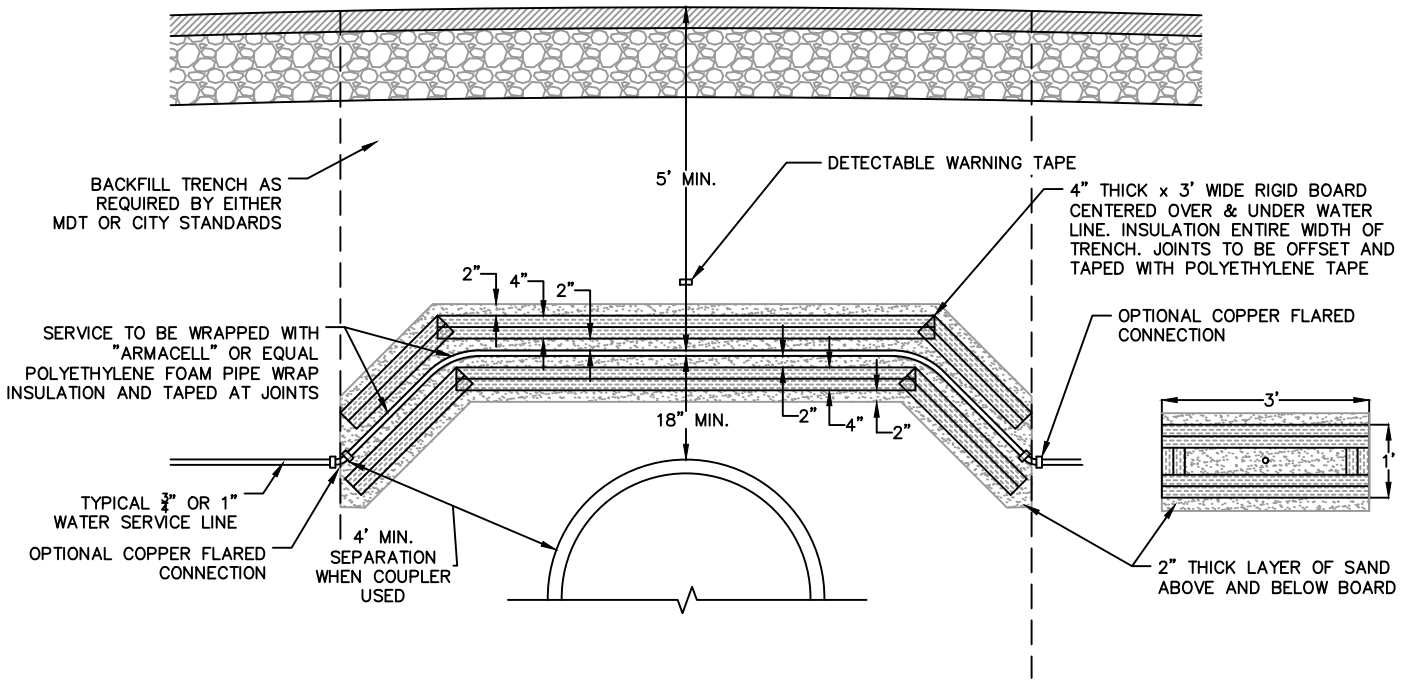

ENLARGED CROSS SECTION

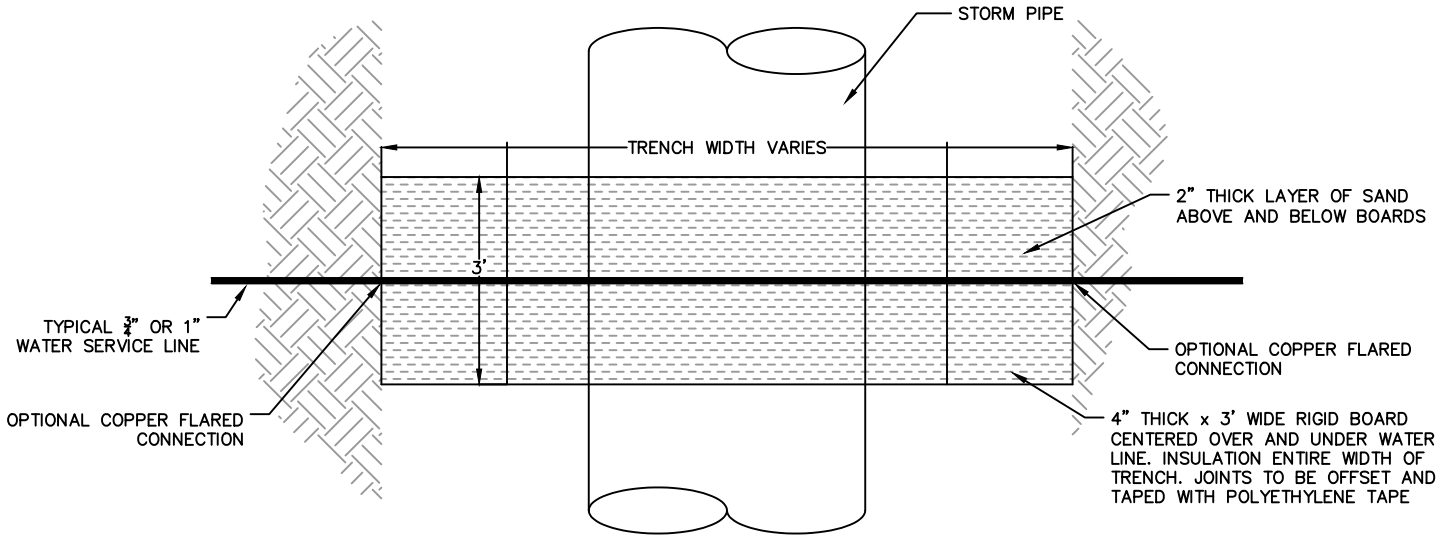

PLAN DETAIL

WATER SERVICE CROSSING ABOVE STORM

OFFICE OF CITY ENGINEER GREAT FALLS, MONTANA	MARCH 2017 REVISED: SEPTEMBER 2023	5 – 45B